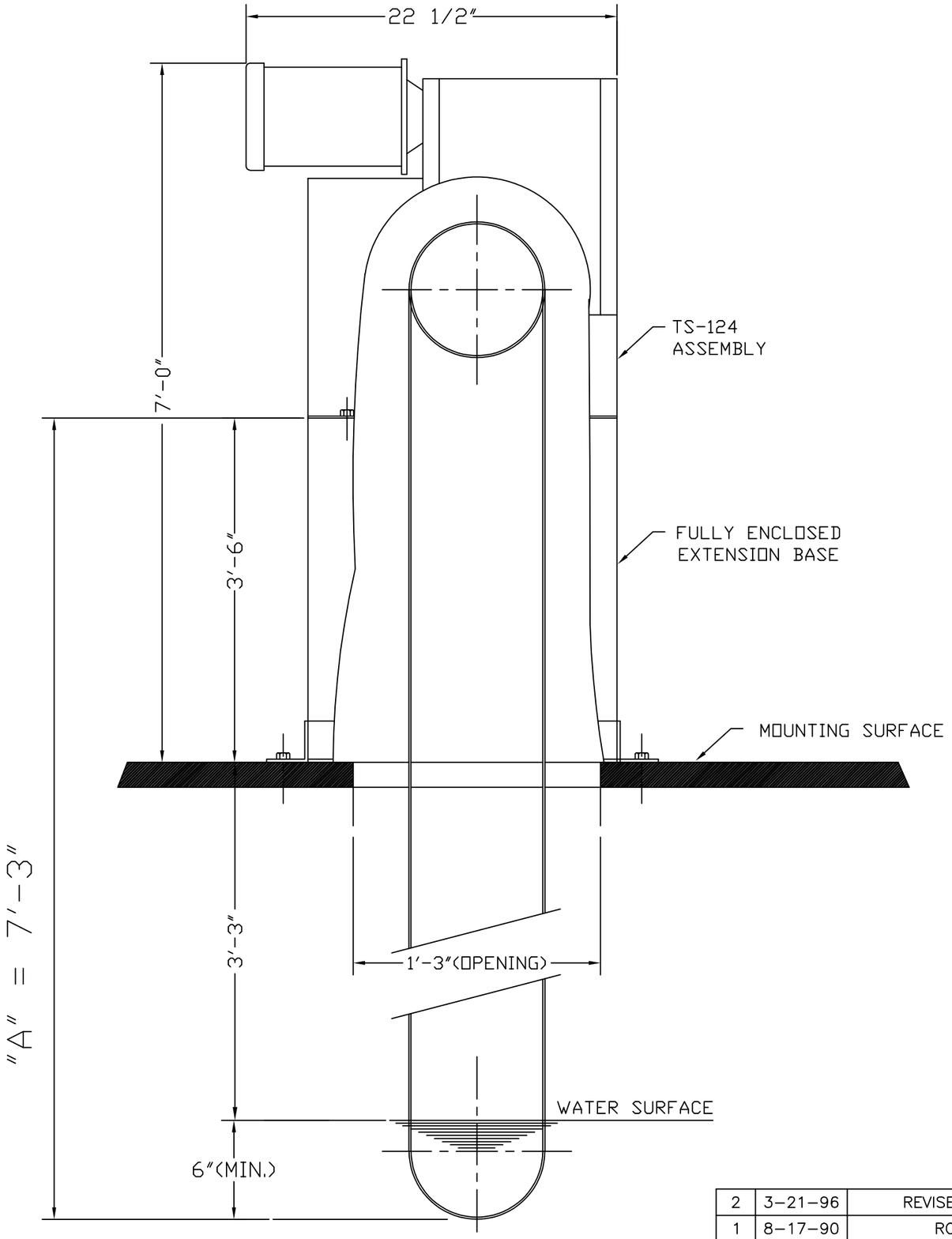

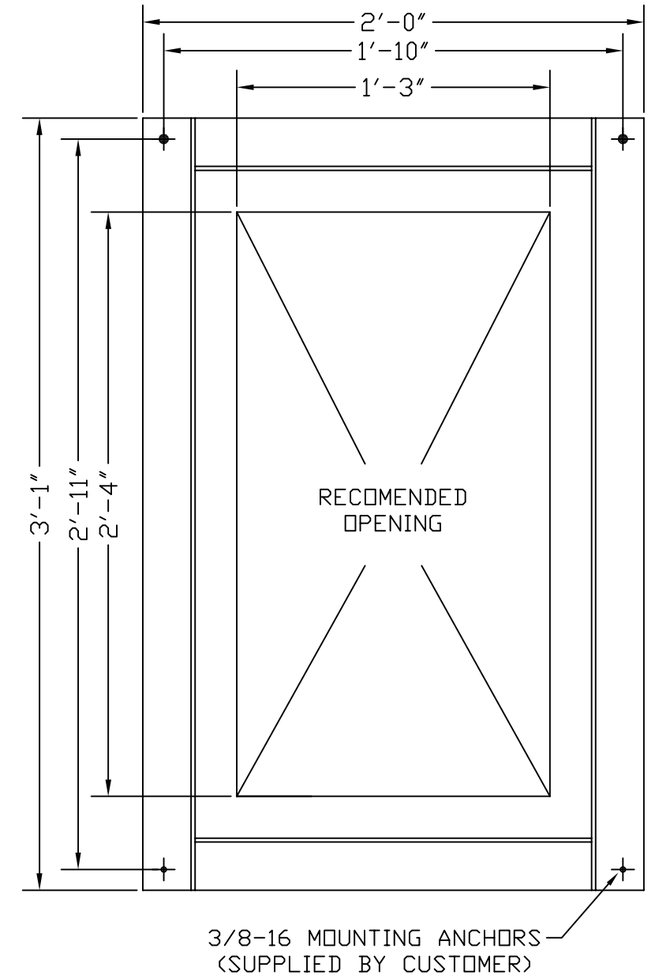

SKIM KLEEN MOUNTING LAYOUT

MK	DATE	DESCRIPTIONS	BY
2	3-21-96	REVISED MTG.LAYOUT DIMS.	JTM
1	8-17-90	ROTATE MOTOR 90°	RAK

REVISIONS

TENCO HYDRO, INC. *Industrial/Municipal Wastewater Equipment*

4620 Forest Avenue, Brookfield, Illinois 60513/Telephone: (708) 387-0700

THIS PRINT IS THE PROPERTY OF TENCO HYDRO INC. AND REPRESENTS ITS TECHNOLOGY. IT CANNOT BE USED, LOANED, COPIED, OR REPRODUCED IN ANY MANNER WITHOUT WRITTEN AUTHORIZATION. IT MUST BE RETURNED UPON NOTICE.

DRAWN: J. T. M

CHK'D:

DATE:

SCALE:

JOB NO.: 9407

TITLE: *SKIM-KLEEN®* WITH EXTENSION BASE TS-124

DRAWING NO.: B6-202021

REV.: 2