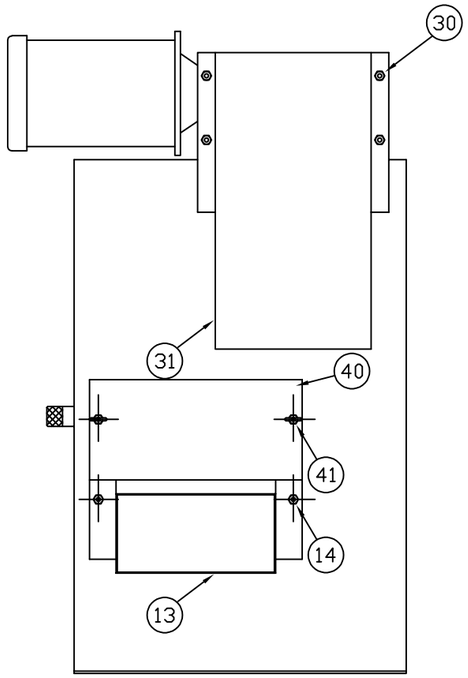


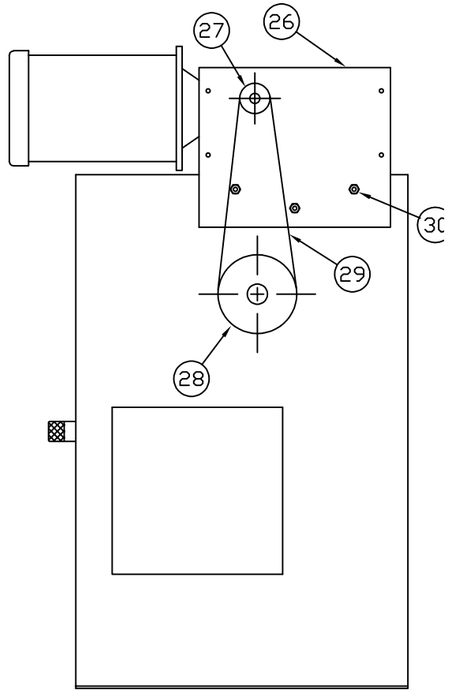


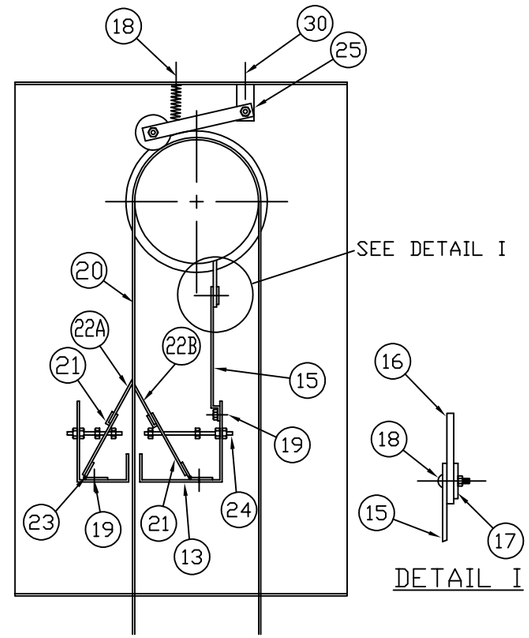





DETAIL I

THERE IS ONE TENSIONER ASSEMBLY
FOR TS-106 & TS-112, AND
TWO FOR TS-118 & TS-124.

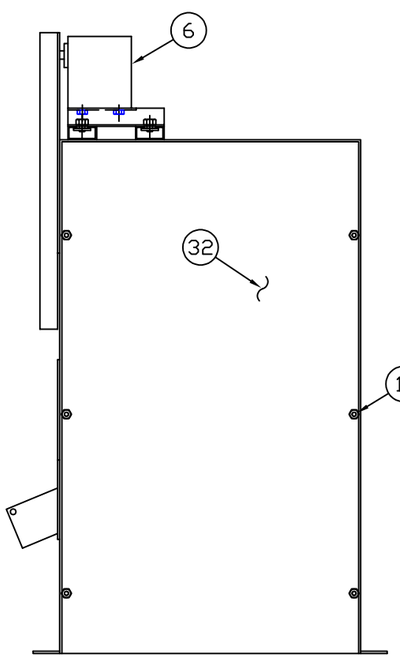


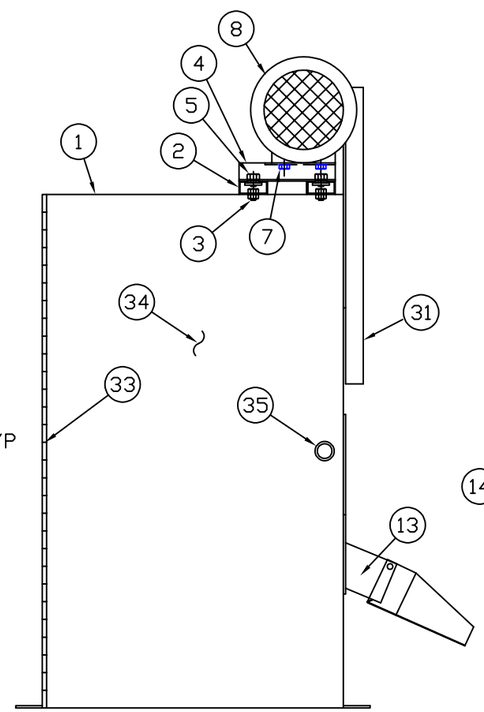


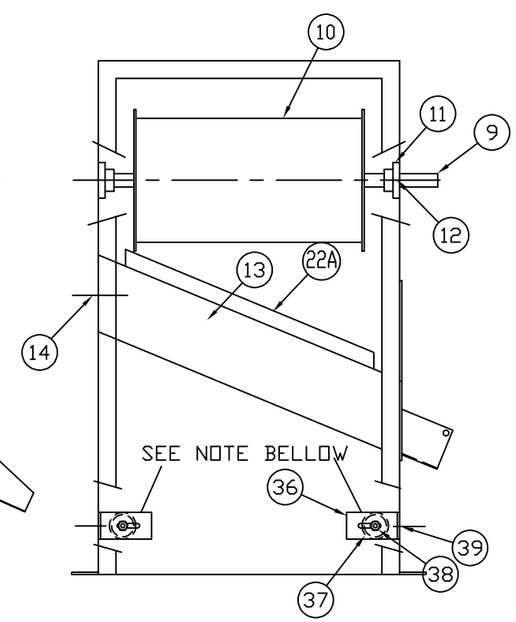


**NOTE:** BELT GUIDE ASSY. ONLY
ON TS-118 & TS-124.

MATERIAL LIST

| NO. | PART NO. | DESCRIPTION | MAT'L. | QTY. |
|---|---|---|---|---|
| 1 | D6-306191 | MAIN FRAME | 304 S.S | 1 |
| 2 | | DRIVE MOUNTING RAIL | ALUMINUM | 2 |
| 3 | | RAIL MOUNTING BOLT | S.S | 4 SETS |
| 4 | B6-302636 | DRIVE MOUNTING FRAME | S.S | 1 |
| 5 | | BRACKET MOUNTING HARDWARE | S.S | 4 SETS |
| 6 | | GEAR REDUCER | | 1 |
| 7 | | REDUCER MOUNTING BOLT | S.S | 4 SETS |
| 8 | | MOTOR | | 1 |
| 9 | 88915K55 | PULLEY SHAFT | 304 S.S | 1 |
| 10 | B6-316003 | PULLEY | 304 S.S | 1 |
| 11 | | BEARING | | 2 |
| 12 | | MOUNTING BOLT | S.S | 4 SETS |
| 13 | C6-320003C | TROUGH (OPEN) | 304 S.S | |
| 14 | | TROUGH MOUNTING BOLT | S.S | 4 SETS |
| 15 | B6-302002 | WIPER BRACKET | 304 S.S | 1 |
| 16 | B6-302010 | WIPER BLADE | PVK | 1 |
| 17 | B6-302002 | WIPER BACKING STRIP | 304 S.S | 1 |
| 18 | | WIPER MOUNTING BOLT | S.S | 4 SETS |
| 19 | | WIPER BRACKET /COVER MOUNTING BOLT | S.S | 23 SETS |
| 20 | | COLLECTION BELT | PVK | 1 |
| 21 | B6-304066 | DOCTOR BLADE HOLDER | 304 S.S | 2 |
| 22A | B6-302375 | DOCTOR BLADE EDGE SET (FRONT 3" WIDE) | 304 S.S | 1 |
| 22B | B6-302375 | DOCTOR BLADE EDGE SET (BACK 2" WIDE) | 304 S.S | 1 |
| 23 | | DOCTOR BLADE HINGE | 304 S.S | 2 |
| 24 | | BLADE ADJUSTING BOLT | S.S | 2 SETS |
| 25 | C6-320004 | TENSIONER ASSEMBLY | | 2 |
| 26 | B6-316158 | GUARD MOUNTING PLATE | 304 S.S | 1 |
| 27 | | DRIVE SPROCKET | | 1 |
| 28 | | DRIVEN SPROCKET | | 1 |
| 29 | | DRIVE CHAIN | CHROME PL. | 1 LENGTH |
| 30 | | MOUNTING BOLT - PLATE AND GUARD | S.S | 11 SETS |
| 31 | B6-307305 | CHAIN GUARD | 304 S.S | 1 |
| 32 | B6-316001 | COVER PLATE | 304 S.S | 1 |
| 33 | | DOOR HINGE | S.S | 1 |
| 34 | B6-304067 | ACCESS DOOR | 304 S.S | 1 |
| 35 | | DOOR LATCH | | 1 |
| 36 | B6-302295 | BELT GUIDE BRACKET | 304 S.S | 2 |
| 37 | B6-307185 | BELT GUIDE ROLLER | | 2 |
| 38 | | BELT GUIDE SHAFT | S.S | 2 |
| 39 | | GUIDE MOUNTING BOLT | S.S | 4 SETS |
| 40 | D6-306191 | TROUGH ACCESS DOOR | S.S | 1 |
| 41 | | WING NUT | NYLON | 2 |

**BEFORE ORDERING SPARE PARTS:**

1. LOCATE ITEM ON ASSEMBLY DRAWING, AND MATCH UP WITH DESCRIPTION ON BILL OF MATERIALS.
2. GIVE COMPLETE DESCRIPTION OF THE PART, i.e. ITEM NUMBER, DESCRIPTION AND QUANTITY REQUIRED. IF A REPLACEMENT PART IS NEEDED FOR THE GEAR REDUCER, ALSO INCLUDE THE REDUCER MODEL NUMBER, THE PART AND ITEM NUMBER AND PART DESCRIPTION OF THE GEAR BOX MANUFACTURER.

**NOTE: EVERY SPARE PARTS ORDER MUST INCLUDE:**

(A) SKIM-KLEEN MODEL No.
(B) JOB No.
(C) YOUR P.O. No.
(D) SHIPPING AND BILLING INSTRUCTIONS.

**MINIMUM ORDER AMOUNTS APPLY.**

| MK | DATE | DESCRIPTIONS | BY |
|---|---|---|---|
| 1 | 3-22-96 | REDRAWN WITH REVISIONS | JTM |

REVISIONS


**TENCO HYDRO, INC.** *Industrial/Municipal Wastewater Equipment*
*4620 Forest Avenue, Brookfield, Illinois 60513/Telephone: (708) 387-0700*



THIS PRINT IS THE PROPERTY OF TENCO HYDRO INC. AND REPRESENTS ITS TECHNOLOGY. IT CANNOT BE USED, LOANED, COPIED, OR REPRODUCED IN ANY MANNER WITHOUT WRITTEN AUTHORIZATION. IT MUST BE RETURNED UPON NOTICE.


| | |
|---|---|
| DRAWN | JAM |
| CHK'D | |
| DATE | JAN. 1982 |
| SCALE | NONE |
| MASTER | MASTER |
| TITLE | SKIM-KLEEN ASSEMBLY |
| DRAWING NO. | CM-219167AAC |
| REV. | 1 |