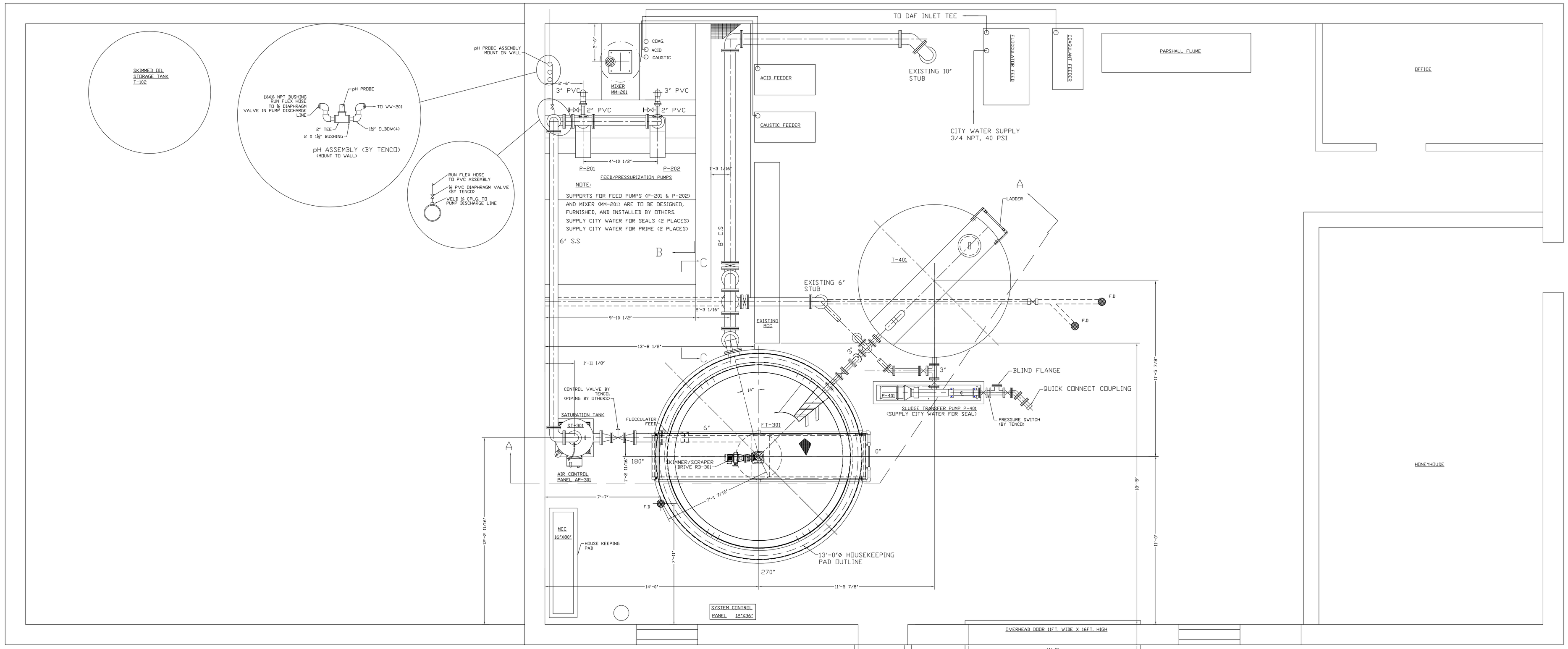

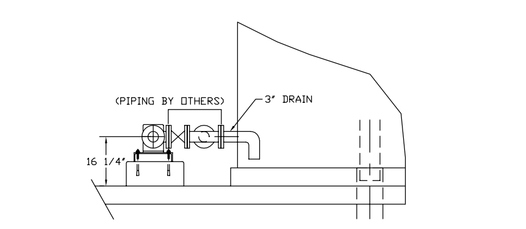

SLUDGE TRANSFER PUMP SUCTION CONNECTION

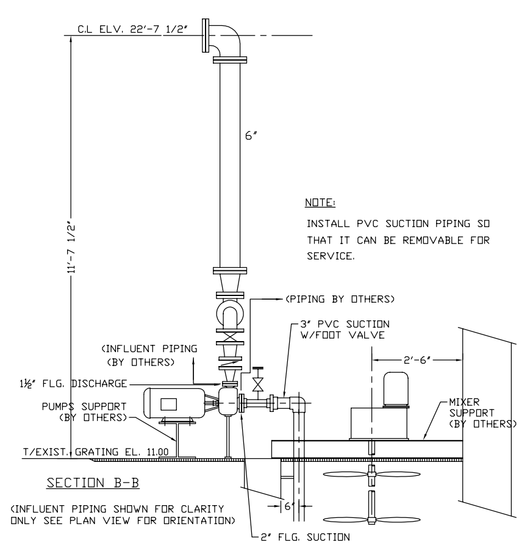

SECTION B-B

(INFLUENT PIPING SHOWN FOR CLARITY ONLY SEE PLAN VIEW FOR ORIENTATION)

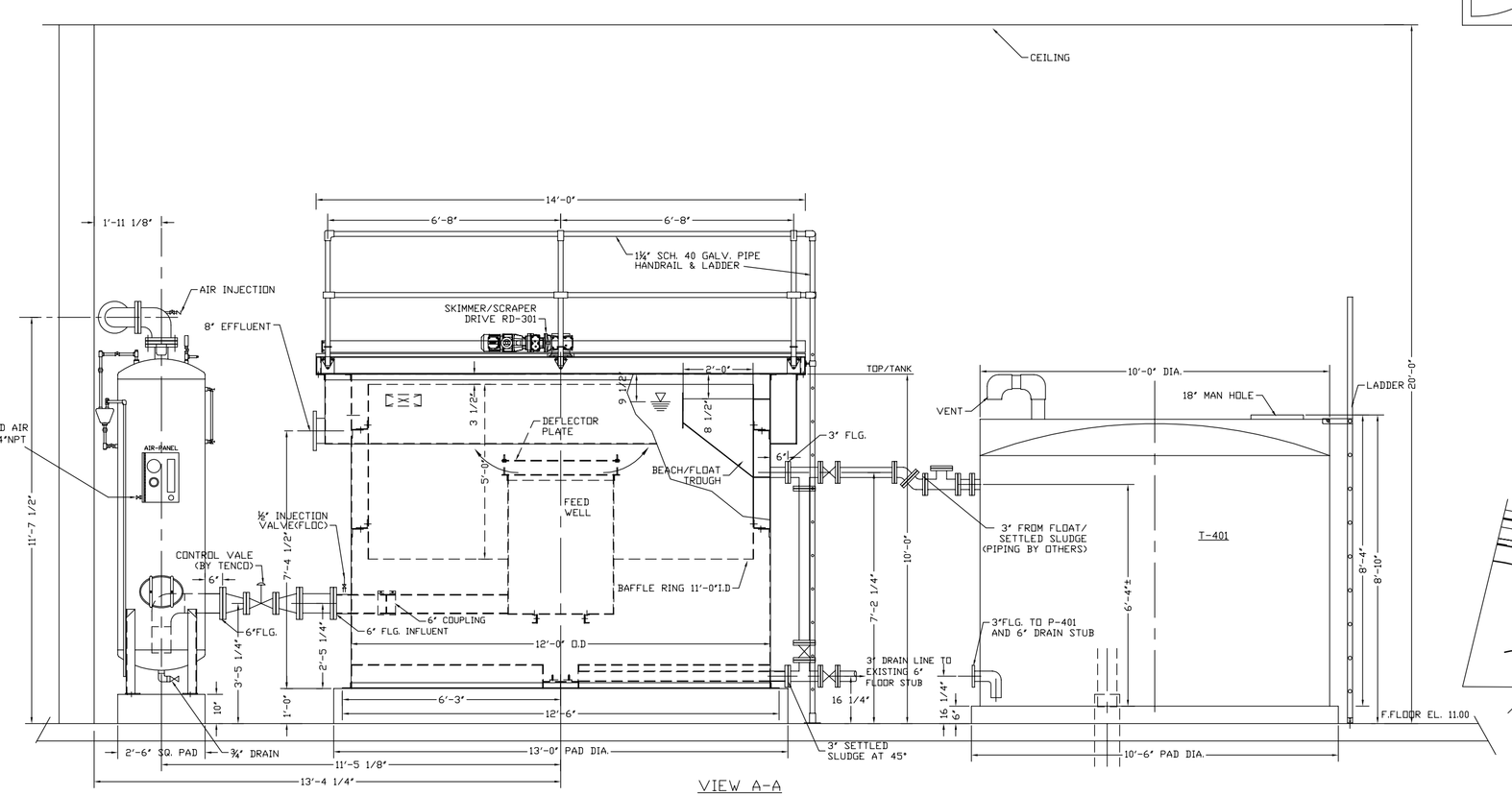

VIEW A-A

(SUGGESTED FLOAT AND SETTLED SLUDGE PIPING SHOWN FOR CLARITY ONLY SEE PLAN VIEW FOR ORIENTATION. PIPING BY OTHERS)

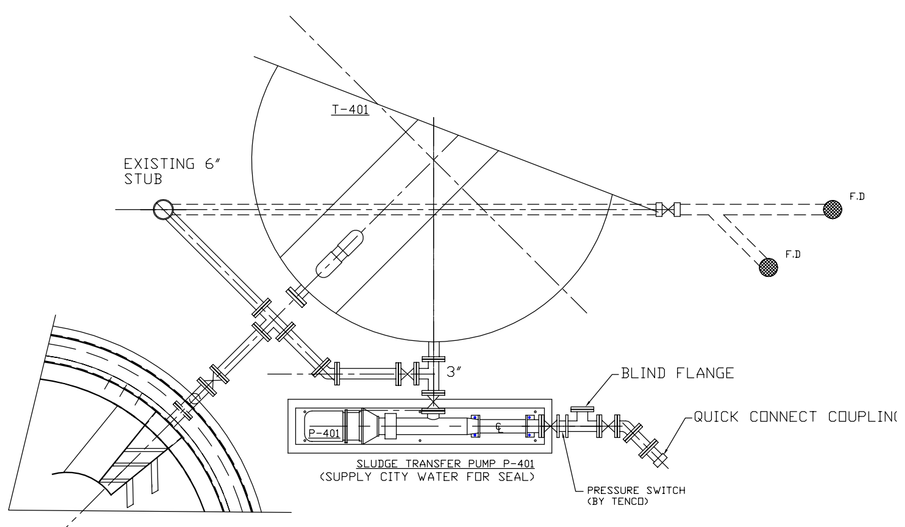

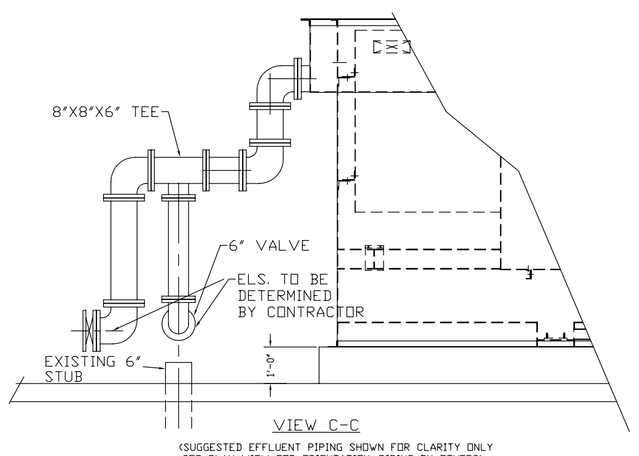

VIEW C-C

(SUGGESTED EFFLUENT PIPING SHOWN FOR CLARITY ONLY SEE PLAN VIEW FOR ORIENTATION. PIPING BY OTHERS)

NOTE:

1. ALL PIPING, VALVES, FITTINGS ARE TO BE SUPPLIED BY CONTRACTOR FOR FIELD INSTALLATION, UNLESS NOITED OTHERWISE.
2. CONCRETE PADS UNDER THE EQUIPMENT ARE BY CONTRACTOR.
3. MCC AND WASTE WATER PANEL PROVIDED BY TENCO. MOUNTING AND WIRING BY CONTRACTOR.
4. PLEASE VERIFY THE LOCATION/ORIENTATION OF EXISTING DRAIN HUBS AND LOCATION OF OVERHEAD DOOR.
5. CONTRACTOR TO VERIFY BUILDING STRUCTURAL DIMENSIONS FOR ANY OBSTRUCTIONS/INTERFERANCE.
6. CONTRACTOR TO VERIFY FLOOR ELEVATIONS.

MK	DATE	DESCRIPTIONS	BY
3	1-23-07	ADDED SLUDGE TANK LADDER	JTM
2	8-18-06	SUBMITTAL REVISION	JTM
1	8-3-06	REVISED LAYOUT TO CLEAR FLOOR DRAIN	JTM

REVISIONS

TENCO HYDRO, INC. *Industrial/Municipal Wastewater Equipment*

4620 Forest Avenue, Brookfield, Illinois 60513/Telephone: (708) 387-0700

THIS PRINT IS THE PROPERTY OF TENCO HYDRO INC. AND REPRESENTS ITS TECHNOLOGY. IT CANNOT BE USED, LOANED, COPIED, OR REPRODUCED IN ANY MANNER WITHOUT WRITTEN AUTHORIZATION. IT MUST BE RETURNED UPON NOTICE.

DRAWN	J. T. M
CHK'D	
DATE	7-14-2006
SCALE	NONE
JOB NO.	6403
TITLE	GENERAL ARRANGEMENT TENCO EQUIPMENT
DRAWING NO.	D3-101027
REV.	3