JOB#	QTY.	CH'D
7033	1	
8014	1	
1032	2	
1048	2	
1091	1	
2033	1	
2009	1	
3002	1	
4030	1	
4062	1	
4053	1	
4106	1	
5208	1	
5259	1	
5274	1	
0211	1	
2201	1	
6423	1	
7425	1	
9407	1	
7606	1	
1604	1	

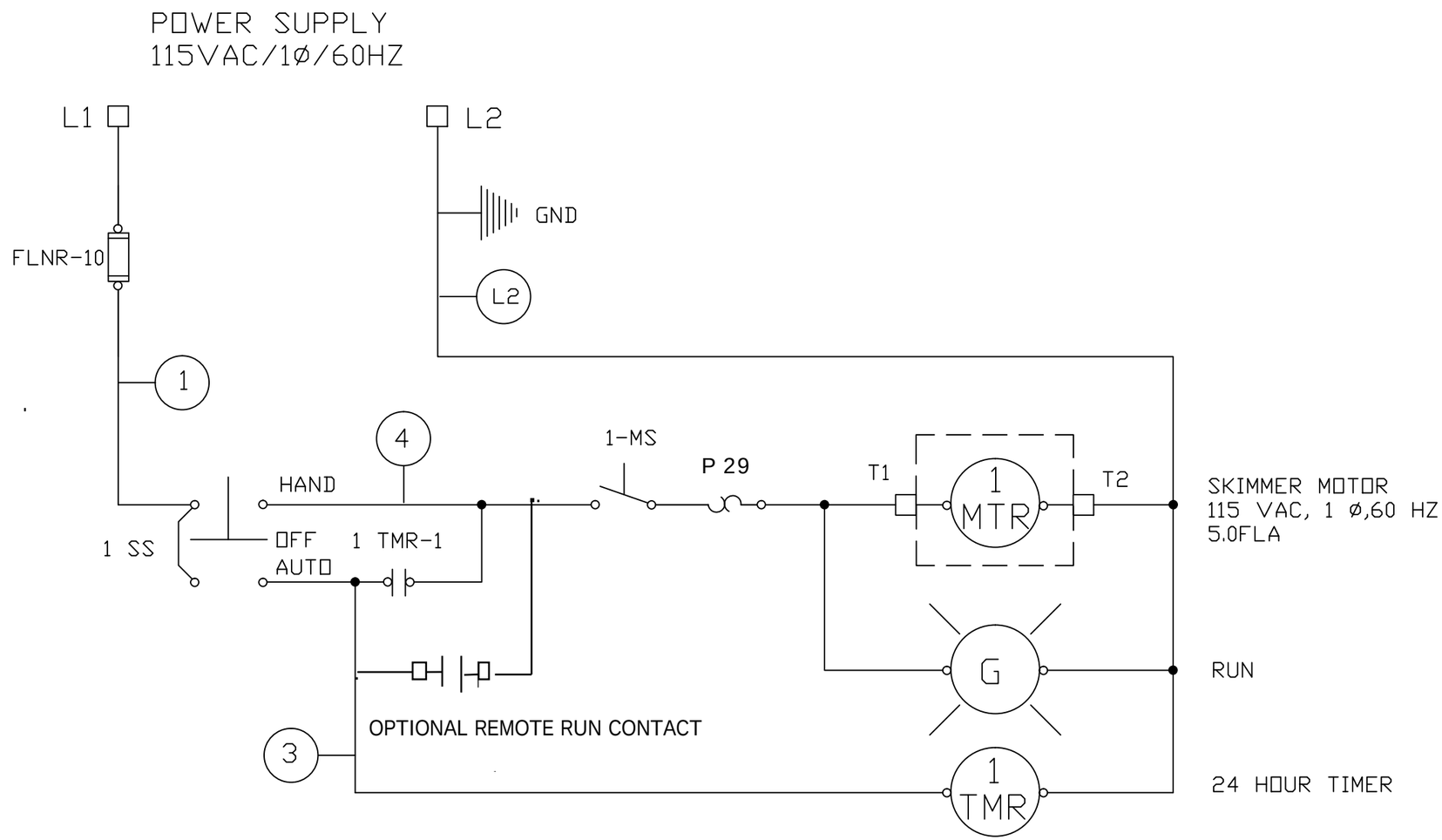

NOTES:

1.INCLUDES NEMA 4X ENCLOSURE.

7 4-2018 ADDED REMOTE RUN CONTACT

MK	DATE	DESCRIPTIONS	BY
6	8-28-09	CHANGED HEATER	JTM
5	7-19-00	CHANGED FUSE,ADDED LIGHT	JTM
4	7-14-92	GENERAL REVISION	RAK
3	JAN '92	1-MS POLE ADDED	WBS
2	6-7-91	GENERAL REVISION	JTM
1	6-25-87	NEW SCHEMATIC	JRS

REVISIONS

TENCO HYDRO, INC. *Industrial/Municipal Wastewater Equipment*

4620 Forest Avenue, Brookfield, Illinois 60513/Telephone: (708) 387-0700

THIS PRINT IS THE PROPERTY OF TENCO HYDRO INC. AND REPRESENTS ITS TECHNOLOGY. IT CANNOT BE USED, LOANED, COPIED, OR REPRODUCED IN ANY MANNER WITHOUT WRITTEN AUTHORIZATION. IT MUST BE RETURNED UPON NOTICE.

DRAWN J. T. M
CHK'D
DATE 6-25-87
SCALE NONE
JOB NO. SEE LEGEND

TITLE
OPTION 5-115V BELT SKIMMER CONTROL SCHEMATIC

DRAWING NO. BM-127058
REV. 7